ELECTRIC DIAGRAM FOR COLD SALADBARS

MODEL WITH TOP ILLUMINATING
(WITH BROKEN LINE ROUTE)

- SB-C - 120
- SB-C (CP) - 155
- SB-C - 155 - WT
- SB-C (CP) - 220
- SB-C - 220 - WT
- BC-AK-T - 4 GN
- BC-AK-T - 6 GN

MODEL WITHOUT TOP ILLUMINATING
(WITHOUT BROKEN LINE ROUTE)

- BC - AK - 4 GN
- BC - AK - 6 GN

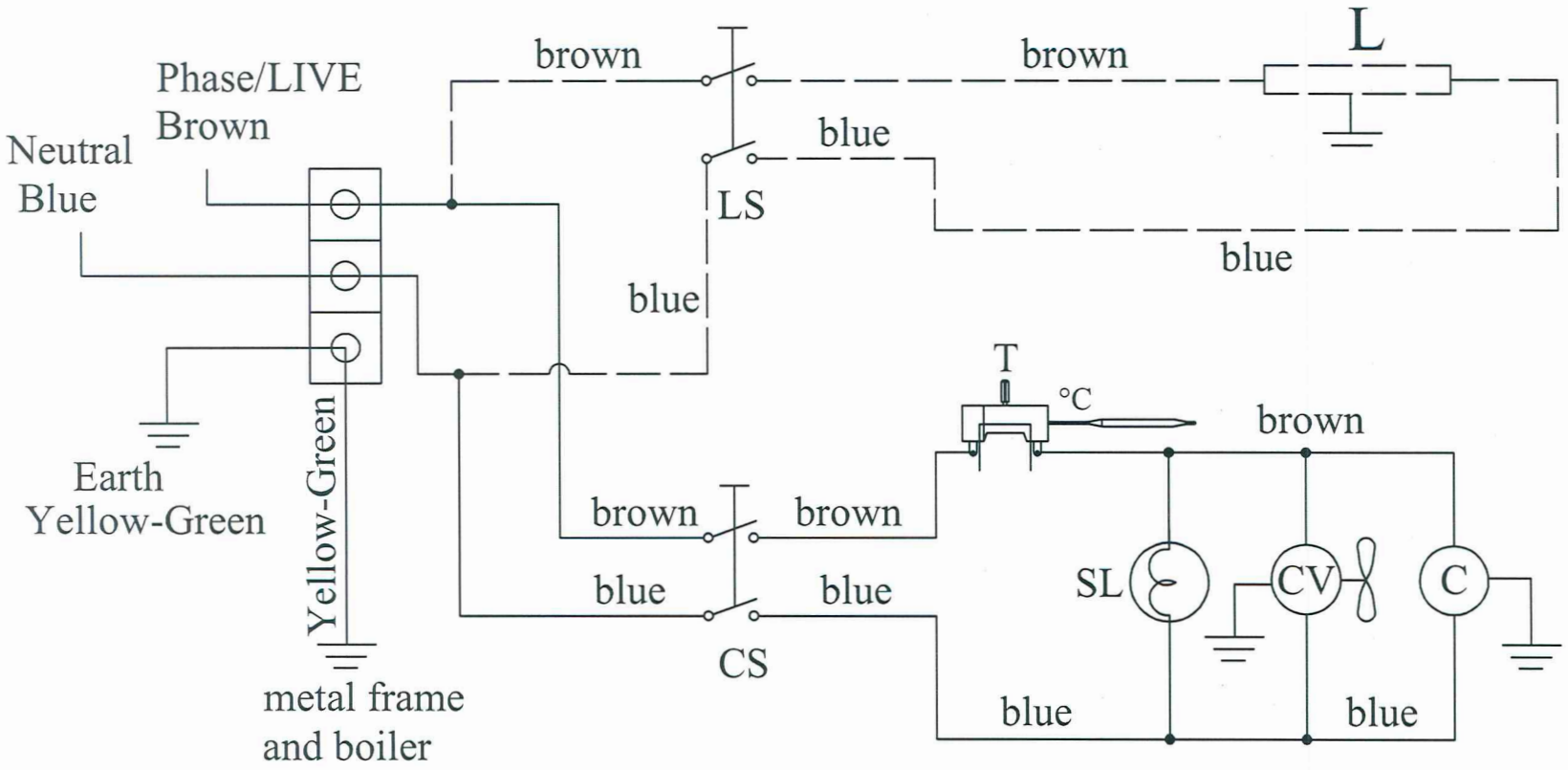

LS : LAMP SWITCH

L : LAMP
SB-C 120 = 14 W
SB-C 155 /220 = 28 W
BC-AK-T-4/6GN = 28 W

T : THERMOSTAT

CS : COOLING SWITCH

CV: CONDENSER VENTILATOR

C : COMPRESSOR

SL : SIGNAL LAMP

ING.ED-SBC-XX/BC-AK-XX