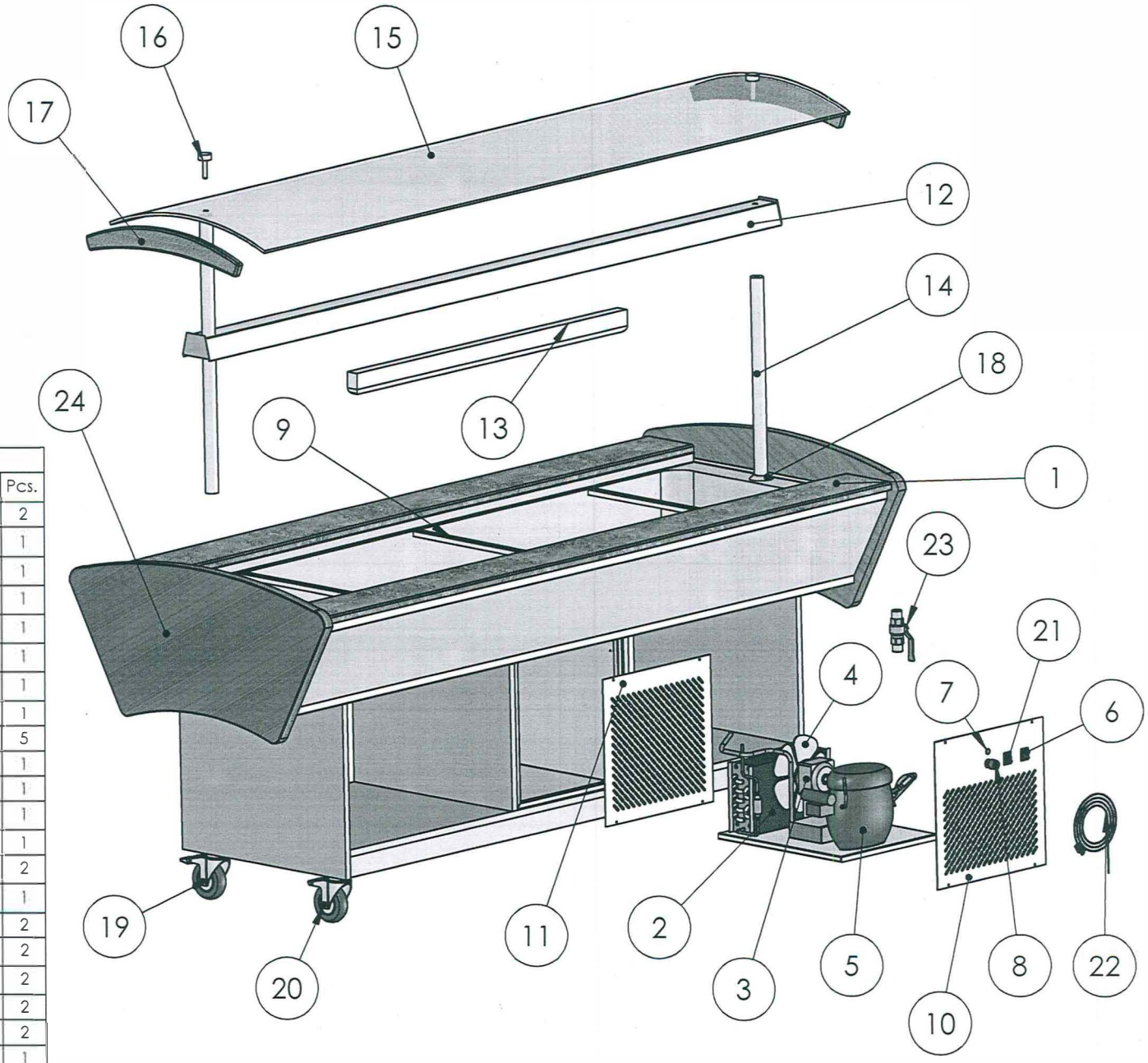

BR6GN			
No	Item Description	Item Code	Pcs.
1	Granite	IY12 000000 02	2
2	Condenser	I020 000000 01	1
3	Condenser Fan	I024 000000 04	1
4	Fan Propeller	I022 000000 02	1
5	Compressor	I023 000000 02	1
6	Lighting Switch	I025 000 000 06	1
7	Signal Lamp	I025 000000 07	1
8	Thermostat	I032 000000 03	1
9	GN Pan Basis	IY11 000000 03	5
10	Control Panel	IY13 000000 01	1
11	Back Panel	IY13 000000 02	1
12	Saladbar Lamp Sheet Cover	IY10 000000 05	1
13	Flouresant	I025 000000 02	1
14	Lighting Pipe	IY14 000000 14	2
15	Saladbar Lamp Glass Cover	I017 000000 17	1
16	Screw	IY14 000000 15	2
17	Saladbar's Top Wood Furniture	IY15 000000 01	2
18	Pipe Ring	IY11 000000 04	2
19	Wheel Breaked	I035 000000 07	2
20	Wheel Free	I035 000000 08	2
21	On-Of Switch	I025 000000 06	1
22	Plug Cable	I025 000001 01	1
23	Valve	I038 000000 02	1
24	Saladbar's Middle Wood Furniture	IY15 000000 02	2