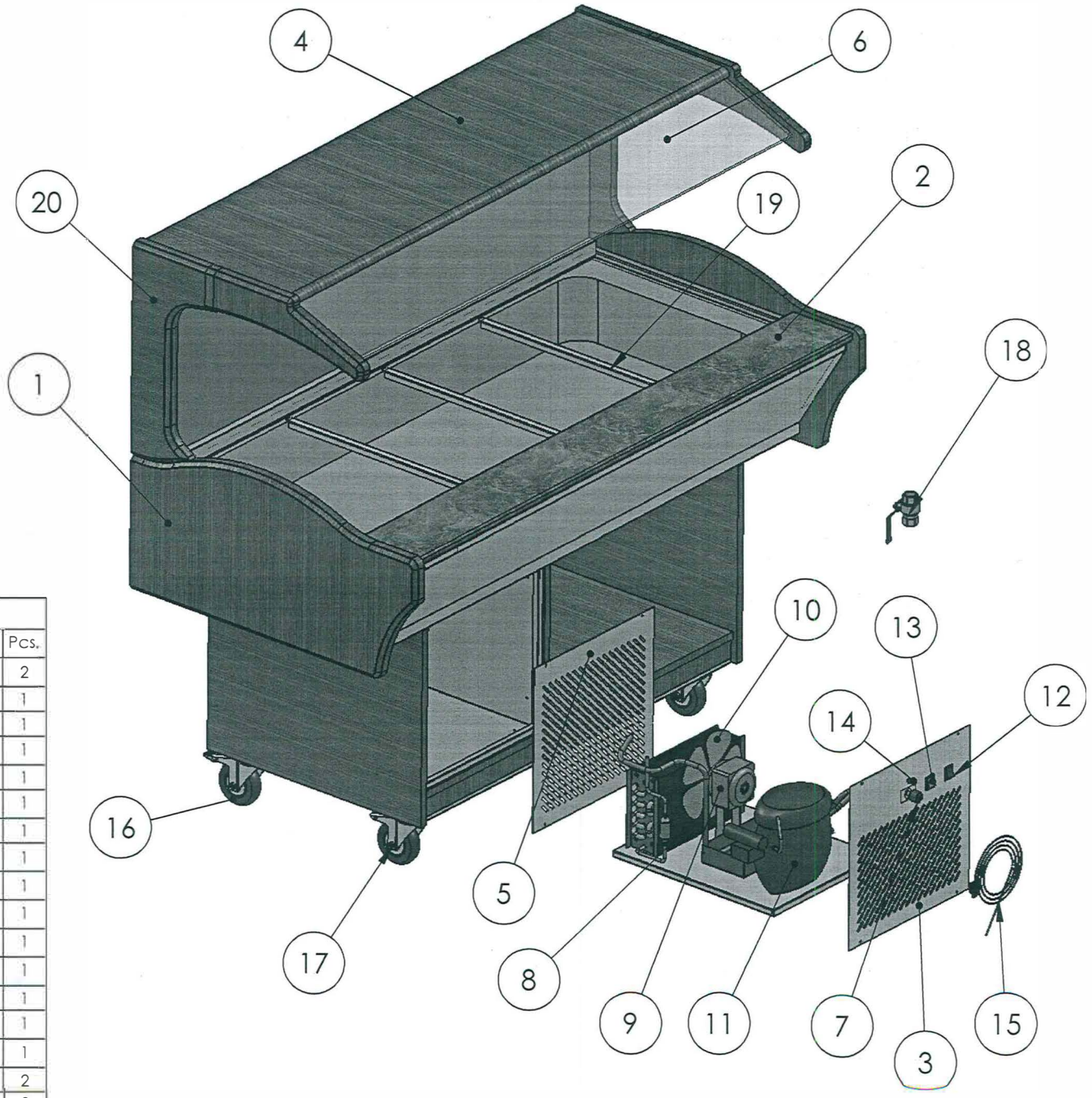

BRM4GN			
No	Item Description	Item Code	Pcs.
1	Saladbar's Middle Wood Furniture	IY15 000000 03	2
2	Granite	IY12 000000 02	1
3	Conrol Panel	IY13 000000 01	1
4	Saladbar's Top Wood Furniture	IY15 000000 04	1
5	Back Panel	IY13 000000 02	1
6	Top Glass	I017 000000 21	1
7	Thermostat	I032 000000 03	1
8	Condenser	I020 000000 01	1
9	Condenser Fan	I024 000000 04	1
10	Fan Propeller	I022 000000 02	1
11	Compressor	I023 000000 02	1
12	Lighting Switch	I025 000000 06	1
13	On-Of Switch	I025 000000 06	1
14	Signal Lamp	I025 000000 07	1
15	Plug Cable	I025 000001 01	1
16	Wheel Breaked	I035 000000 07	2
17	Wheel Free	I035 000000 05	2
18	Valve	I038 000000 02	1
19	GN Pan Basis	IY11 000000 03	3
70	Saladbar's Side Wood Furniture	IY15 000000 05	2