OLIS
we innovate cooking

DIAMANTE 70

ELECTRIC RANGE WITH CAST IRON PLATES
CUCINE ELETTRICHE CON PIASTRA IN GHISA

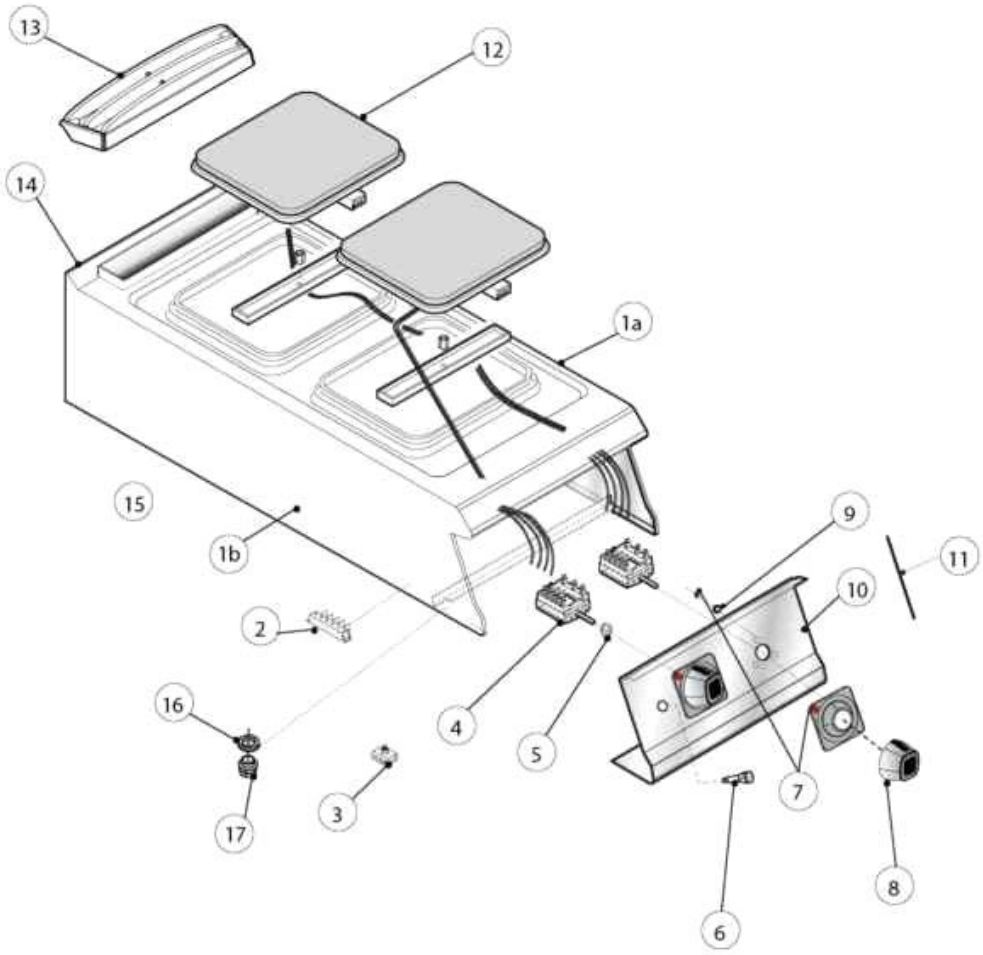

Table_A

EDITION 10 2016

CR0993729	D72/10	TCEPQ
CR0993779	D72/10	CEPQ

Pos	Réf.	Description	Prix ()
0002	CR0588170	(EX BN6A036206) BOITE 6 POLI FV122 B 40A-450V	
0003	MA1878400	BOITE	
0004	MA1616100	(EX BN6A045500) COMMUTATEUR	
0005	CR0587650	JOINT	
0006	CR0587500	TEMOIN	
0007	CR1028470R	KIT DISQUE	
0008	CR1028390R	KIT MANETTE	
0009	CR0588510	JOINT	
0010	CR0796630	CRUSCOTTO CUCINE EL.M40 OLIS	
0011	CR0587640	PROFILO GUARNIZIONE CRUSCOTTI	
0012	CR1078117	PLAQUE Q220 2600W 230V	
0013	CR0582060	GRILLE SCARICO FUMI M40	
0014	CR0581360	SCHIENALE TOP M40	
0015	CR0736940	DISTANZIALE M8X18	
0016	CR1020970	CONTRODADO OBO 116/PG21 NY	
0017	CR1020960	PRESSE CABLE	
001a	CR0739490	FIANCO DX TOP 700 OLIS	
001b	CR0739480	FIANCO SX TOP 700 OLIS	