EXPLODE OF HF400V

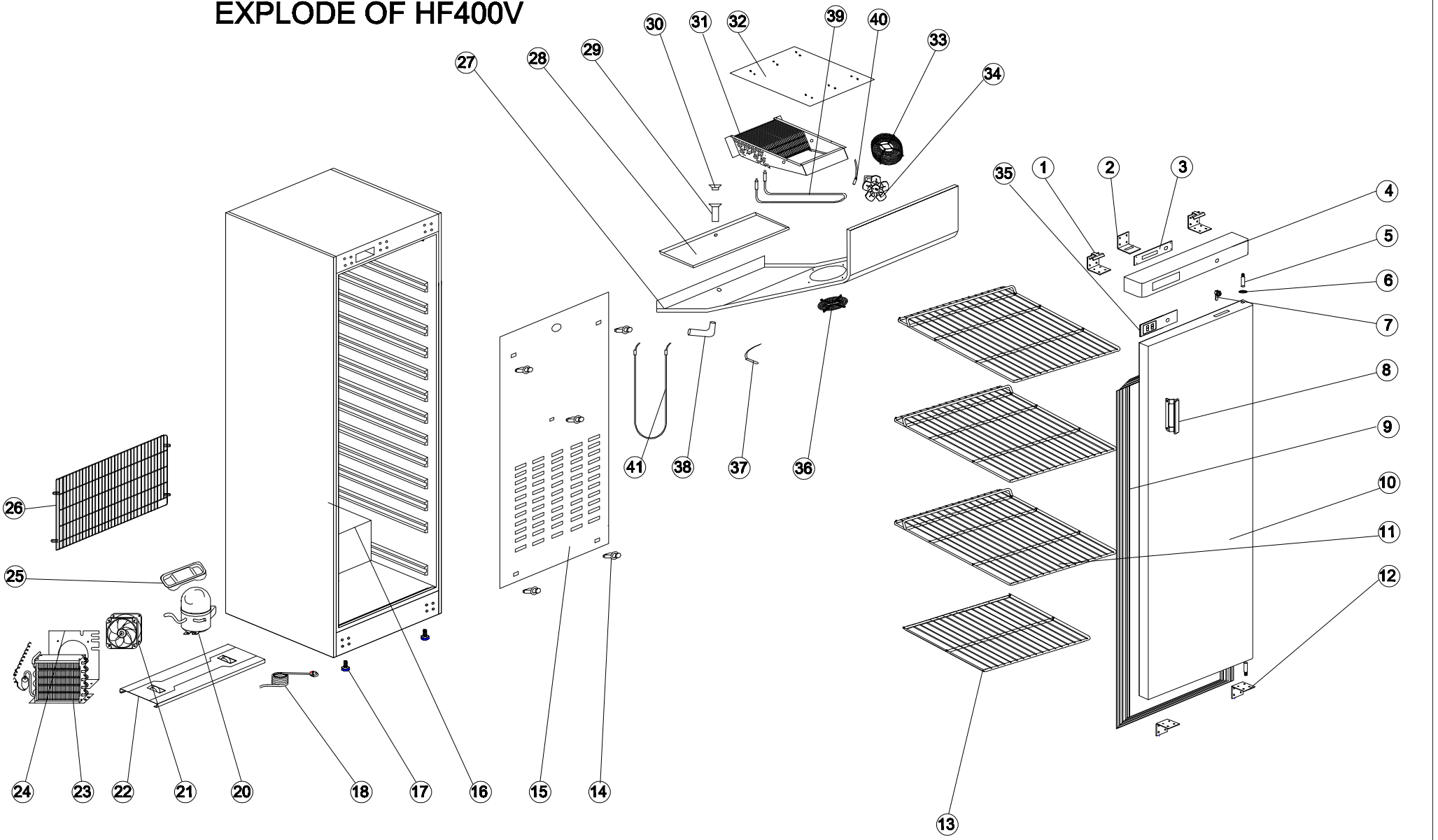

SPARE PARTS LIST OF HF400V

NO	CODE	NAME	MODEL	QTY	MATERIAL	REMARK	
01	HF600.01	UP HINGE		2PCS			
02	HF600.02	HOOK OF LOCK		1PC			
03	HF600.09	THERMOSTAT SUPPORT		1PC			
04	HF200.01	FRONT PANEL		1PC			
05	HF600.19	HINGE AXIS	Φ7	2PCS			
06	GN2100TN.07	BUSHING		1PC			
07	HR200.86	LOCK		1PC			
08	SC300.18	HANDLE		1PC			
09	HF400.03	GASKET		1PC			
10	HR400V.01	DOOR		1PC			
11	HR400V.02A	SHELF		3PCS			
12	HF600.08	DOWN HINGE		2PCS			
13	HR200V.02B	BOTTOM SHELF		1PC			
14	HR600.06	EVAPORATOR FIXER		5PCS			
15	HR400V.03	AIR FLOW CONDUCT BOARD		1PC			
16	HF400V.01	BODY		1PC			
17	S900.13	FEET		2PCS			
18	S900.47	PLUG		1PC			
20	S900.41Z	COMPRESSOR	OF1350A	1PC			
21	S900.34	CONDENSER FAN	SA1238A2	1PC			
22	HF400.08	UNITE BOARD		1PC			
23	HR110.06	CONDENSER		1PC			
24	HR600.10	CONDENSER FAN SUPPORT		1PC			
25	S900.40A	WATER BOX		1PC			
26	HF400.10	UNITE ROOM GRILLS		1PC			
27	HR400V.05	CIRCLE FAN SUPPORT		1PC			
28	D432.03	EVAPORATOR WATER PAN		1PC	STAINLESS		

NO	CODE	NAME	MODEL	QTY	MATERIAL	REMARK	
29	D420D.14	INTERNAL WATER PIPE NUT		1PC	PLASTIC		
30	D420D.13	OUTSIDE WATER PIPE BOLT		1PC	PLASTIC		
31	D432.06	EVAPORATOR		1PC			
32	HR400V.06	FIXED BOARD OF EVAPORATOR		1PC			
33	GN650TN.23	WALL RING		1PC			
34	GN650BT.11	CIRCLE FAN	CA03-51/C18	1PC			
35	GN650BT.16	THERMOSTAT	XR06CX	1PC			
36	HR400V.07	CIRCLE FAN COVER		1PC			
37	S900.32	SENSOR		1PC			
38	GN60TN.07	WATER PIPE		1PC			
39	D432.04	DEFROST HEATING ELEMENT		1PC			
40	D432.09	PROTECTOR FOR HEATING ELEMENT		1PC			
41	D420.22	WATER PIPE HEATER		1PC			